Published: 11-May-2011

Speed Control - TDV6 3.0L Diesel - Speed Control

Description and Operation

3.0L V6 DIESEL SPEED CONTROL COMPONENT LOCATION

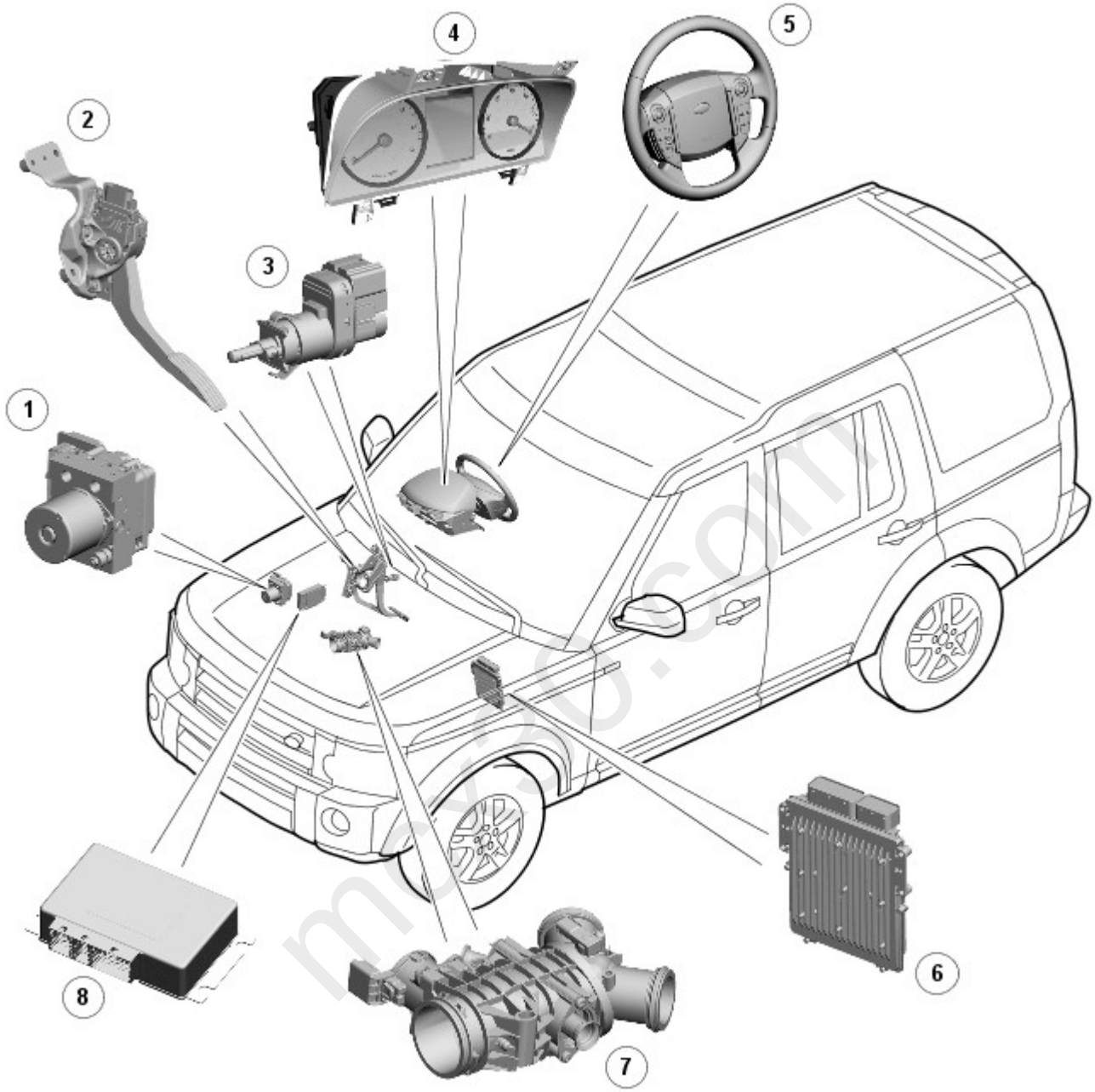

Item	Part Number	Description
1	-	Anti-lock Brake System (ABS) module
2	-	Accelerator Pedal Position (APP) sensor
3	-	Brake switch
4	-	Instrument cluster
5	-	Speed control switches
6	-	Engine Control Module (ECM)
7	-	Electric throttle
8	-	Transfer box control module

GENERAL

The speed control system maintains a set speed selected by the driver until operation is suspended or cancelled by a further input from the driver and is controlled by the Engine Control Module (ECM).

The system has the following components:

- A set + switch
- A - switch

- A RESUME switch
- A CANCEL switch.

The system uses the following vehicle systems:

- The ECM
- The brake switch
- The Accelerator Pedal Position (APP) sensor.

DESCRIPTION

Speed Control Switches

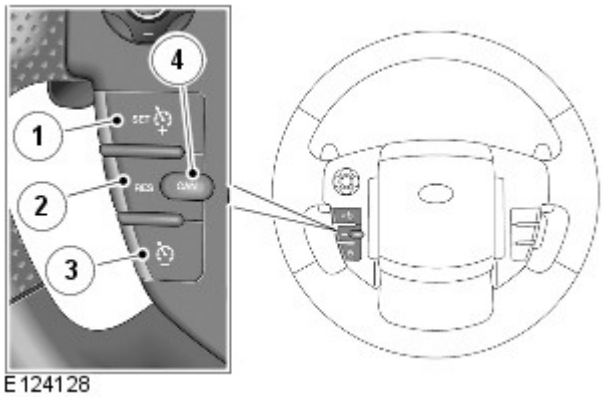

Item	Part Number	Description
1	-	Set '+' increase the speed
2	-	Decrease '-' the speed
3	-	Resume set speed
4	-	Cancels without erasing memorized speed

Instrument Cluster Warning Indicator

Item	Part Number	Description
1	-	Speed control warning indicator

The speed control switches are located on the Left Hand (LH) side of the steering wheel. The switches are connected via fly leads to the clock spring. The speed control switches are resistive ladder type switches which vary the resistance of a 5 volt signal sent to them. The signal is returned along a Local Interconnect Network (LIN) bus to the instrument cluster. The instrument cluster routes the control signals to the Engine Control Module (ECM) on the high speed Controller Area Network (CAN) bus.

Speed control is engaged by pressing the set/increase switch. Once engaged the speed can be varied by the speed adjustment switches. Each press of the speed adjustment switches (+/-) will increase or decrease the set speed in steps of 1 mph (2 kph).

Accelerate/Decelerate (+/-) Switches

The Set + switch is used to activate the speed control system and set the speed control at the current vehicle speed. A speed control warning indicator will illuminate on the instrument cluster to advise the driver that the system is active. The switch can be pressed to adjust the set speed. Each single press of the switch increases the vehicle speed by 1 mph (2 km/h). If the switch is pressed and held the vehicle speed will increase and the once the switch is released the attained vehicle speed will be maintained.

The vehicle speed can be increased by using the accelerator pedal. When the accelerator pedal is released the vehicle speed will reduce to the previously set speed. When the vehicle speed is increased by use of the accelerator pedal, the message 'Cruise Override' will be displayed in the instrument cluster message center. This method can also be used to increase the vehicle set speed; once the required increase in speed is achieved, a single press of the Set + switch will maintain that speed as the new set speed.

• NOTE: If the accelerator pedal is pressed for more than 5 minutes, the speed control is cancelled.

The '-' switch can be used to decrease the vehicle set speed. The speed can be reduced by pressing and holding the switch until the required set speed is reached. When the switch is released the current speed will become the new set speed. A single press of the '-' switch will decrease the vehicle speed by 1 mph (2 km/h).

Cancel Switch

Speed control can be suspended temporarily or switched off by a single press of the Cancel switch. When the switch is pressed the speed control warning indicator in the instrument cluster is extinguished and the message 'Cruise Cancelled' is displayed in the message center.

Speed control can also be suspended if the brake pedal is pressed, if the transmission selector lever is moved to the neutral position or if Hill Descent Control (HDC) or Dynamic Stability Control (DSC) become active.

Once suspended, the cruise control can be resumed at the previously set speed by pressing the resume switch.

• NOTE: The set speed is not removed from the memory when the cancel switch is pressed. The set speed is only erased when the ignition is off.

Resume Switch

The resume speed is used to re-activate the speed control system at the previously set speed after the speed control has been cancelled or suspended.

OPERATION

Speed Control

The speed control system is integrated with the engine management system and uses fueling intervention to automatically maintain a set vehicle speed. Once engaged, the system can also be used to accelerate the vehicle without using the accelerator pedal. The speed control system comprises the following components:

- '+' and '-' (set/accelerate and decelerate) steering wheel switches
- Resume switch
- Cancel switch
- Clock spring
- Speed control warning lamp.

The speed control system also uses inputs from the brake pedal switch, the APP sensor, the ECM and the ABS module.

The speed control is operated by the driver using only the steering wheel switches. When speed control is active, the ECM regulates the Pulse Width Modulation (PWM) signals to the fuel injectors to adjust the fuel supply as required to maintain the set speed.

During speed control operation, the ECM controls vehicle speed by adjusting fuel injection duration and timing. When the accelerator pedal is pressed with speed control active, the ECM outputs a calculated throttle angle signal in place of the actual throttle angle signals produced by the APP sensor. The calculated throttle angle is derived from fuel demand.

The minimum set speed for speed control is 20 mph (32 (km/h). Speed control is automatically suspended if the following conditions apply:

- Vehicle speed falls below 20 mph (32 km/h).
- The brake pedal is pressed
- The cancel button is pressed
- Neutral, park or reverse gear is selected
- Certain Terrain Modes are selected (i.e. Rock crawl)
- Low range gear selected
- The difference between actual speed and the set speed is too great
- When the vehicle speed reaches a maximum speed of 150 mph (240 kph)
- If the accelerator pedal is used to accelerate beyond the set speed for too long
- Stability control system intervention
- System error causes shut-off.

CONTROL DIAGRAM

• NOTE: **A** = Hardwired; **D** = High speed CAN Bus

mc730.com

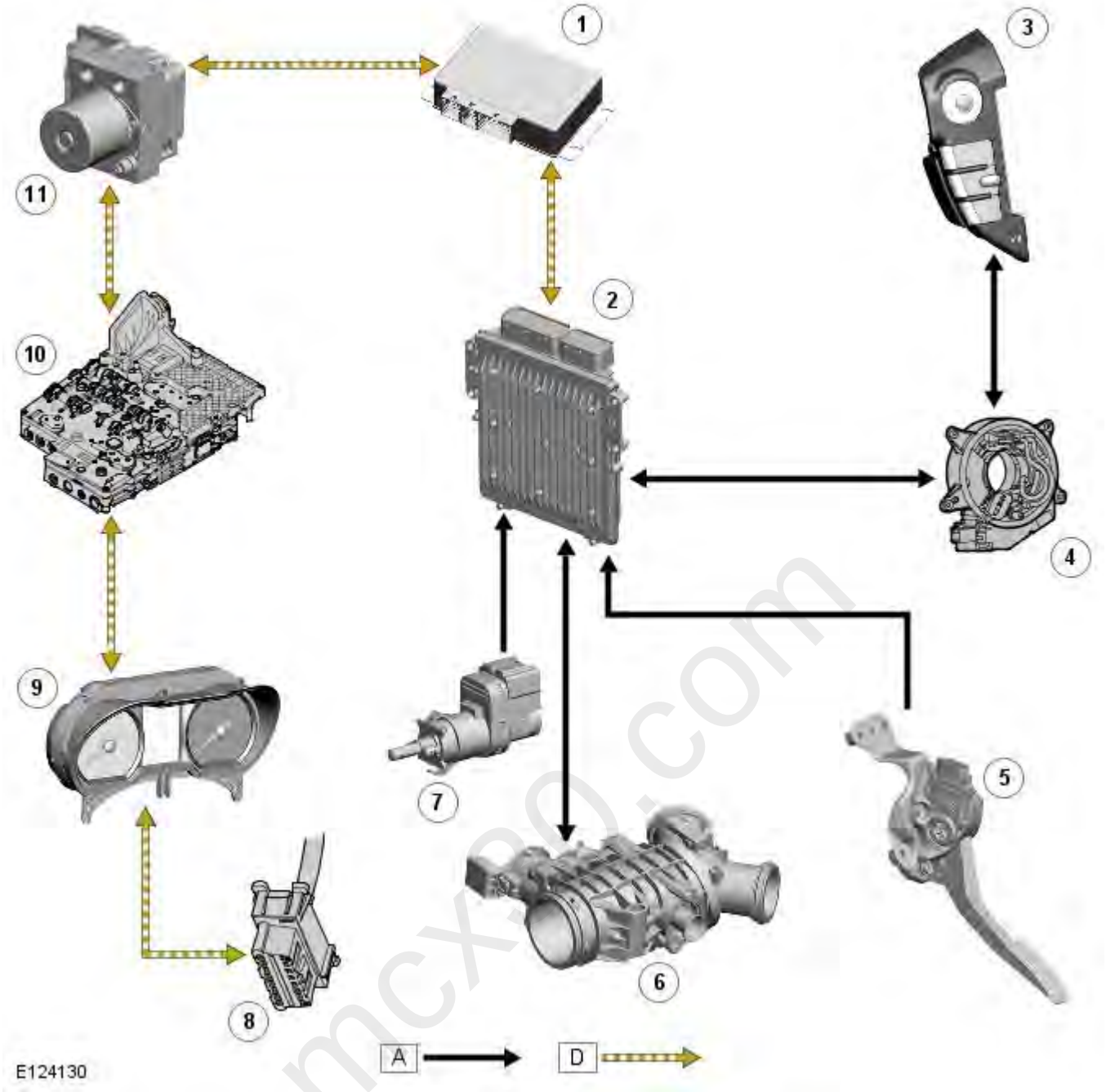

Item	Part Number	Description
1	-	Transfer box control module
2	-	Engine control Module (ECM)
3	-	Left Hand (LH) steering wheel speed control switches
4	-	Clock spring
5	-	Accelerator Pedal Position (APP) sensor
6	-	Electric throttle
7	-	Brake switch
8	-	Diagnostic socket
9	-	Instrument cluster
10	-	Transmission Control Module (TCM)
11	-	Anti-lock Brake System (ABS) module

Published: 11-May-2011

Speed Control - TDV6 3.0L Diesel - Speed Control Switch

Removal and Installation

Removal

• WARNINGS:

To avoid accidental deployment, the restraints control module backup power supply must be depleted. Wait at least one minute after disconnecting the battery ground cable(s) before commencing any repair or adjustment to the supplemental restraint system (SRS), or any component(s) adjacent to the SRS sensors. Failure to follow these instructions may result in personal injury.

Always wear safety glasses when working on an air bag equipped vehicle and when handling an air bag module. Failure to follow this instruction may result in personal injury.

To minimize the possibility of premature deployment, do not use radio key code savers when working on the supplemental restraint system. Failure to follow this instruction may result in personal injury.

To minimize the possibility of injury in the event of premature deployment, always carry a live air bag module with the bag and trim cover pointed away from the body. Failure to follow this instruction may result in personal injury.

To minimize the possibility of premature deployment, live air bag modules must only be placed on work benches which have been ground bonded and with the trim cover facing up. Failure to follow these instructions may result in personal injury.

Never probe the electrical connectors of air bag modules or any other supplemental restraint system component. Failure to follow this instruction may result in personal injury.

Painting over the driver air bag module trim cover or instrument panel could lead to deterioration of the trim cover and air bags. Do not for any reason attempt to paint discolored or damaged air bag module trim covers or instrument panel. Install a new component. Failure to follow this instruction may result in personal injury.

• NOTE: Removal steps in this procedure may contain installation details.

1. Make the air bag supplemental restraint system (SRS) safe.

   Refer to: Standard Workshop Practices (100-00 General Information, Description and Operation).

2. Disconnect the battery ground cable.

   Refer to: Specifications (414-00 Battery and Charging System - General Information, Specifications).

3. Refer to: Driver Air Bag Module (501-20B Supplemental Restraint System, Removal and Installation).

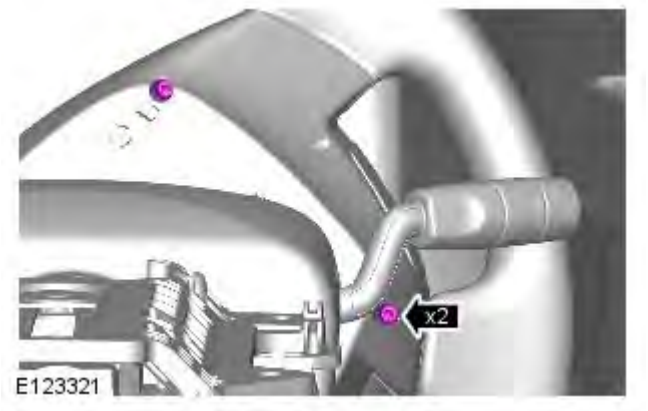

4. *Torque:* 1.5 Nm

mcx30.com

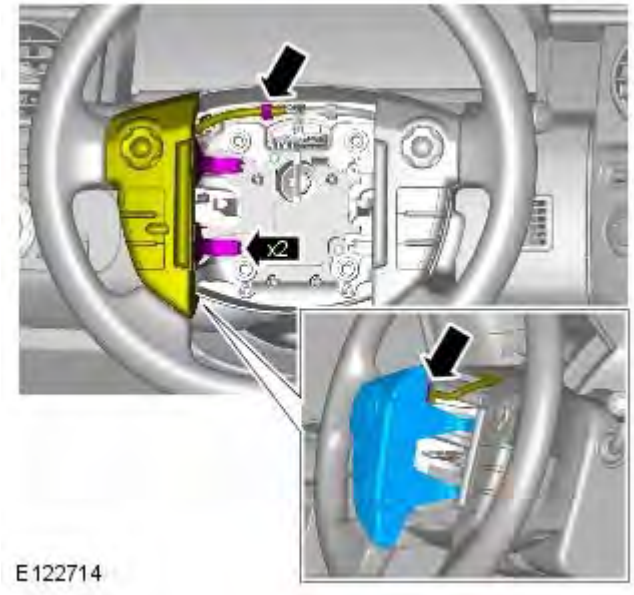

5.

Installation

1. To install, reverse the removal procedure.

mcx30.com